	Type	Sub-section
RENAULT 5/Extra	X40 X	11
KANGOO	XC0 X	11
CLIO	X57 X	11
CLIO II	XB0 X	11
RENAULT 9	L42 X	11
RENAULT 11	X37 X	11
RENAULT 19	X53 X	11
MEGANE	XA0 X	11
RENAULT 21	X48 X	11
LAGUNA	X56 X	11
SAFRANE	X54 X	11
RENAULT Trafic	XXX X	11
ESPACE	JE0 X	11

This note cancels and replaces Technical Note N° 2475A

11 SPECIAL NOTES FOR REMOVAL AND REFITTING OF MONOBLOCK TAPPET ADJUSTING SHIMS (WITH AND WITHOUT NOTCHES) AND VALVE STEM SEALS

- Engine : **F and N All Types** **Basic Manual**: **XXX**
- Gearbox : **XXX**

This Technical Note deals with :

- use of the **Mot. 1366 tool** for removal-refitting of valve clearance adjusting shims **(with notches)** for all **F type engines** (except the 16 valve **F** engine), and the removal-refitting of the valve springs for the **F and N engines, all types** when replacing the valve stem seals,
- use of the **Mot. 1366-01** for removal-refitting of the valve clearance adjusting shims (**without notches)** for all **F type engines** (except the 16 valve **F** engine),
- special notes for the removal-refitting of monoblock tappets for all **F type engines**.

"The repair methods given by the manufacturer in this document are based on the technical specifications current when it was prepared.

The methods may be modified as a result of changes introduced by the manufacturer in the production of the various component units and accessories from which his vehicles are constructed."

All copyrights reserved by Renault.

Copying or translating, in part or in full, of this document or use of the service part reference numbering system is forbidden without the prior written authority of Renault.

© RENAULT 1998

MOT. 1366 TOOL CASE

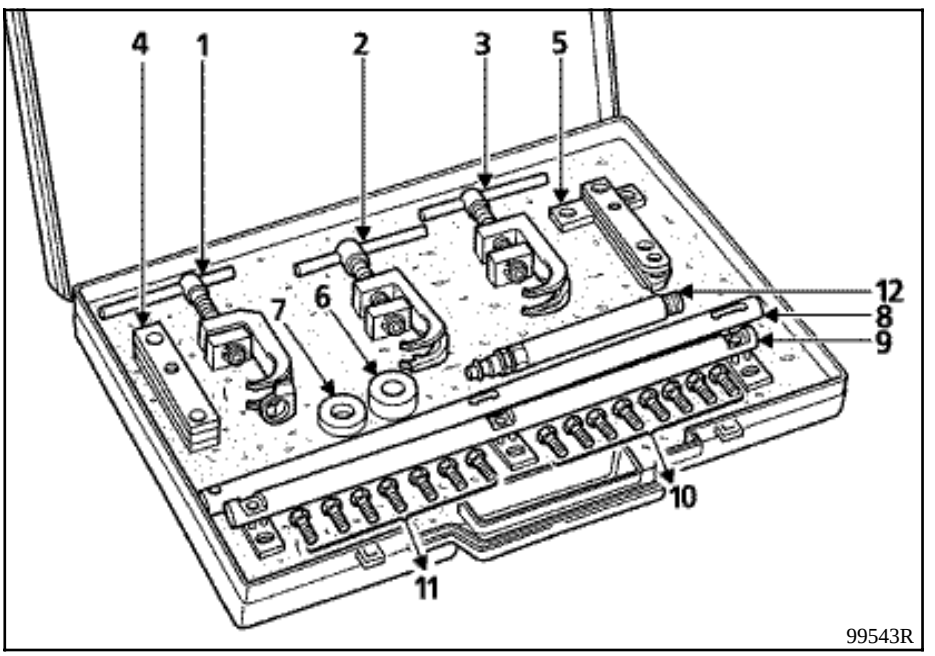

It consists of :
- tool (1) for removing and refitting the valve springs,
- tool (2) for removing and refitting the valve adjusting shims on engines **equipped with a large camshaft hub,**
- tool (3) for removing and refitting the valve adjusting shims on engines **equipped with a small camshaft hub**,
- the three flanges (4) are used to remove and refit the valve springs on the 16-valve **F engine,**
- the three flanges (5) are used to remove and refit the valve springs on the **N7Q** 16-valve engine,
- rings (6) and (7) are used to remove and refit the valve springs on **N7Q** 16-valve and **F** type 16-valve engines only,
- the bar (8) is used to remove and refit the valve springs on **N7Q** and **F** type 16-valve engines,
- the bar (9) is used to remove and refit the valve springs on all types of **F** engine (except **F** type 16-valve engine),
- bolts (10) and (11) are used to secure the flanges and the bars,
- the end piece (12) is used to hold the valves against their seats when removing and refitting the valve springs (only used on petrol engines).

Addition to the kit : Mot. 1366-01

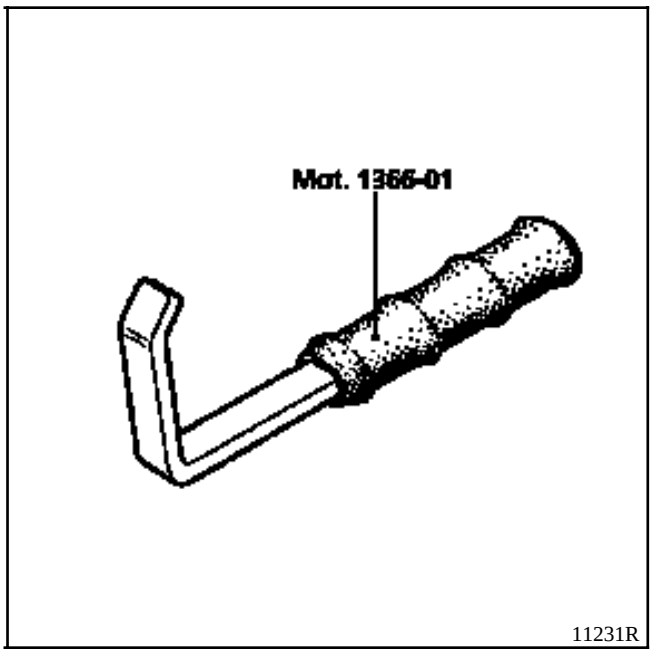

Mot. 1366-01 is used for removal and refitting of the valve adjusting shims without notches for all **F type engines** (except the 16 valve **F** engine).

USING THE TOOL CASE MOT. 1366

Using tool (1) to remove and refit the valve springs

FOR ALL TYPES OF **F ENGINE** EXCEPT **16-VALVE F ENGINE**

After having removed the camshaft and the tappets, fit the bar (9) in place of the camshaft, using the bolts (10).

Place the piston in the top dead centre position. This is the position in which the operation is carried out.

Fit the tool (1) as shown in the diagram below.

NOTE : once the valve springs have been removed, do not turn the crankshaft. This is to prevent the valves falling into the cylinder.

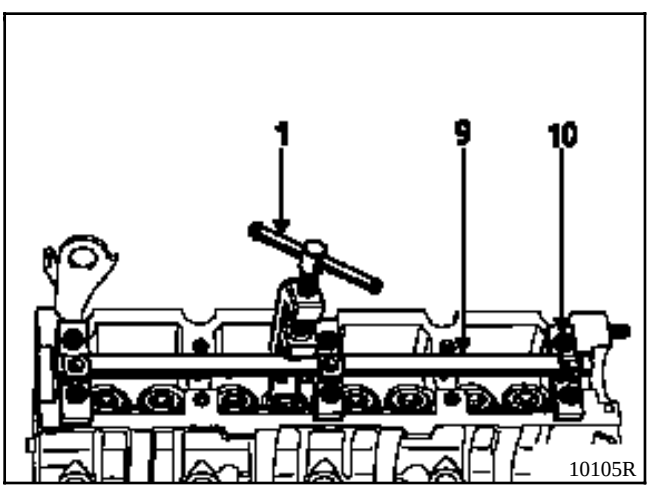

Repeat the whole operation for the other cylinders one at a time.

NOTE :
This operation must be carried out before removing the valve springs.

For petrol engines, the end piece (12) can be fitted in place of the spark plugs so as to hold the valves against their seats. Introducing compressed air into the cylinder risks the piston falling down into the bottom dead centre position.

Before disconnecting the compressed air pipe, check to make sure that the valves are correctly held in place.

16 VALVE F ENGINE

After removing the camshafts and the hydraulic tappets.

Inlet end

Fit the flanges (4) as shown in the diagram below.

Fit the flange engraved **FD at (G)**, the flange engraved **FM at (H)**, and the flange engraved **FG at (I)**, securing them using the bolts (10).

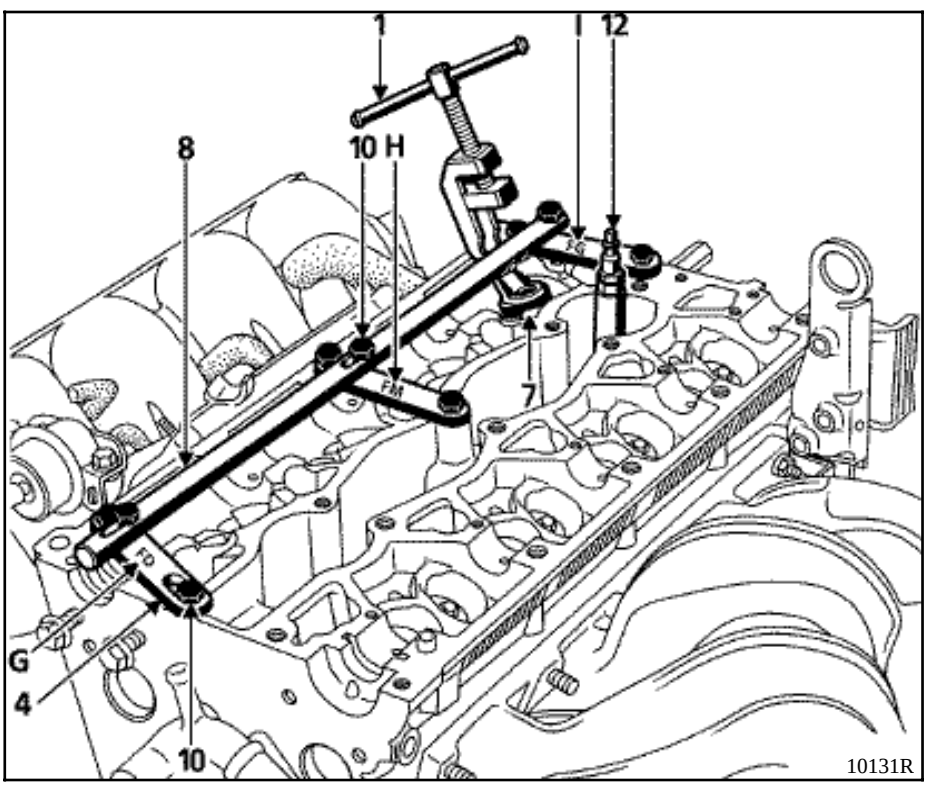

Fix the bar (8) onto the flanges (4) using the bolts (10).

Fit the end piece for the compressed air (12) in place of the spark plug.

Fit the ring (7) in place of the hydraulic tappet, then fit the tool (1).

Exhaust End

Fit the flanges (4) as shown in the diagram below.

Fit the flange engraved **FD at (K)**, the flange engraved **FM at (L)**, and the flange engraved **FG at (M)** securing them using the bolts (10).

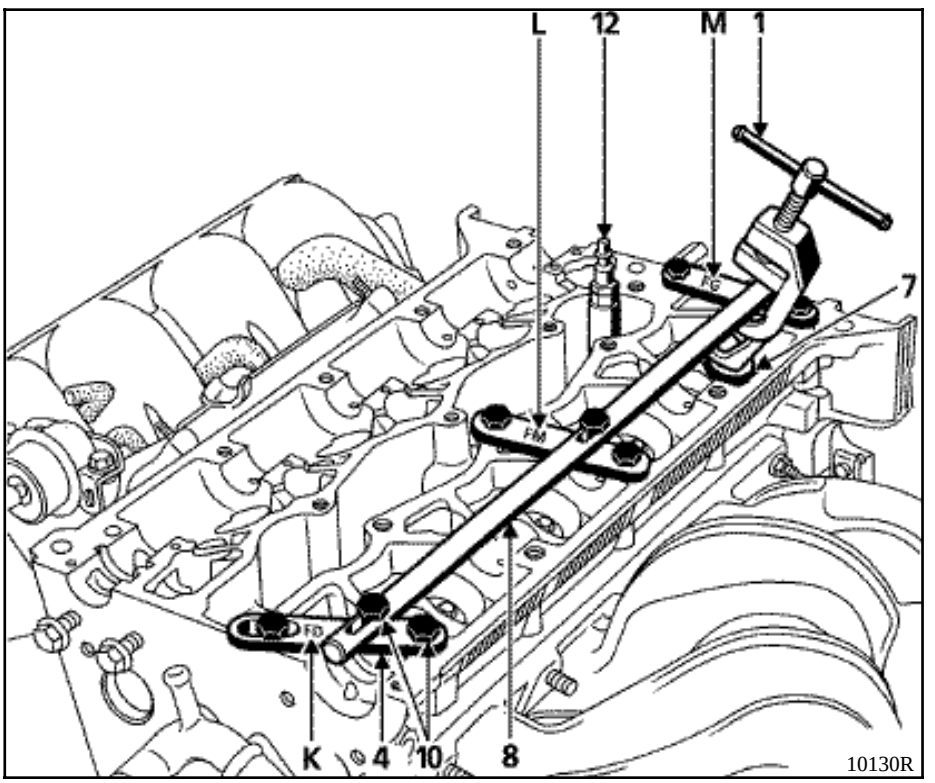

Fix the bar (8) onto the flanges (4) using the bolts (10).

Fit the end piece for the compressed air (12) in place of the spark plug.

Fit the ring (7) in place of the hydraulic tappet, then fit the tool (1).

NOTE :
Always put the piston at TDC for the cylinder on which you are working (before using compressed air). This operation should be carried out before the springs are removed.

If the compressed air is not sufficient to keep the valves closed during removal (remove the air pipe from the end piece (12)), put the piston to TDC and tighten tool (1) until the upper cup becomes detached from the valve spring. When introducing compressed air into the cylinder, there is a risk that the piston will descend to Bottom Dead Centre.

Before disconnecting the compressed air pipe, ensure that the valves are correctly held in place.

For the N7Q engine

After removing the camshafts and the hydraulic tappets for the valves.

Inlet end

Fit the flanges (5) as indicated in the diagram below.

Fit the flange engraved **ND at (A)**, the flange engraved **NM at (B)** and the flange engraved **NG at (C)** using bolts (11) to secure them.

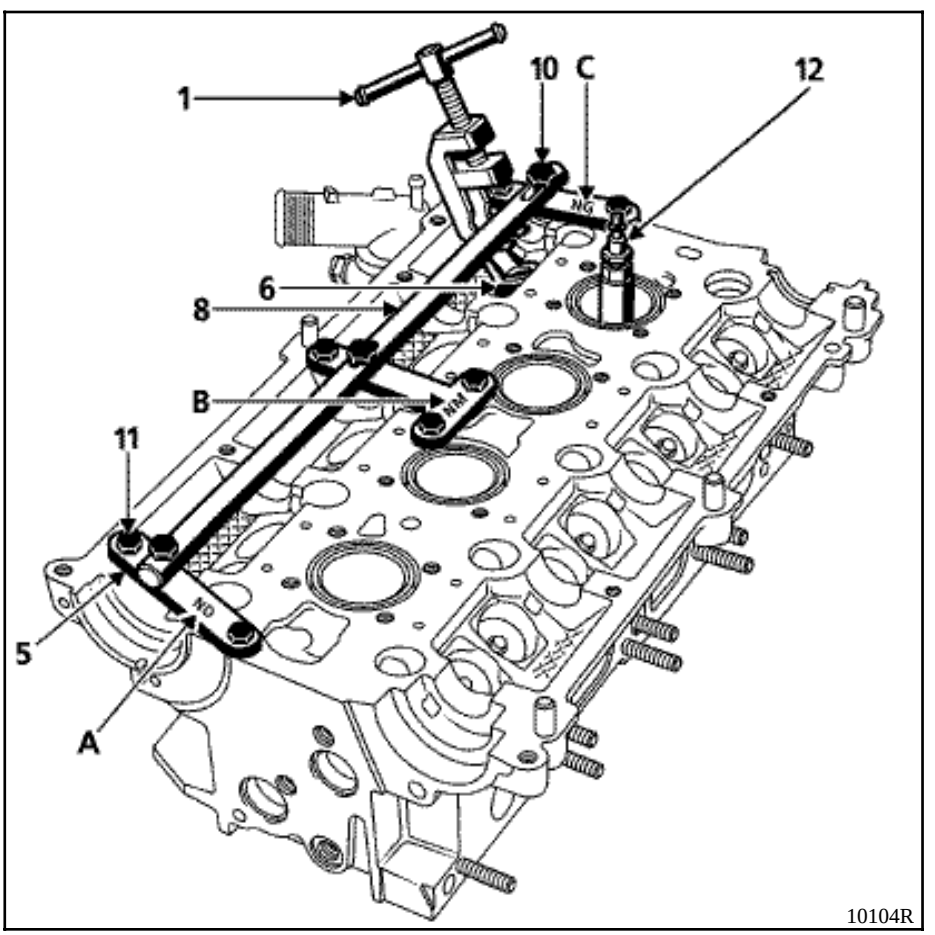

Fix the bar (8) onto the flanges (5) using the bolts (10).

Fit the end piece for the compressed air (12) in place of the spark plug.

Fit the ring (6) in place of the hydraulic tappet, then fit tool (1).

Exhaust end

Fit the flanges (5) as indicated in the diagram below.

Fit the flange engraved **ND at (D)**, the flange engraved **NM at (E)**, **placing the engraved part on the cylinder head side**, and the flange engraved **NG at (F)** securing them with bolts (11).

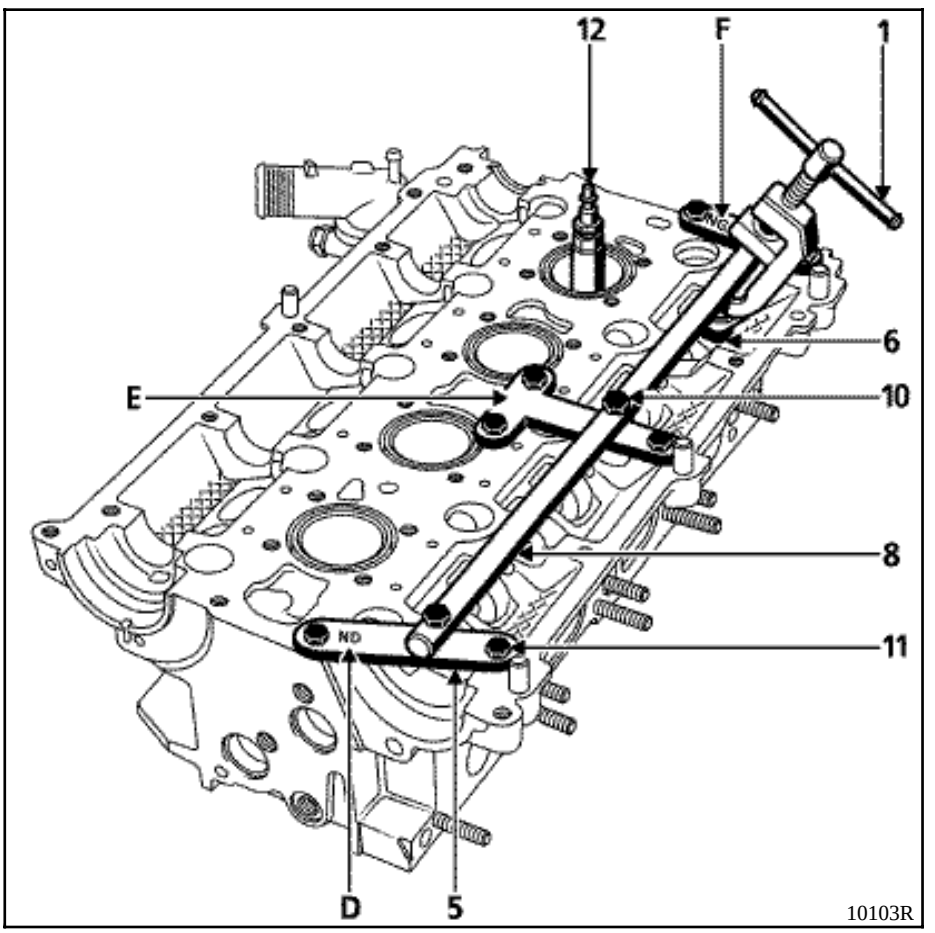

Fix the bar (8) onto the flanges (5) using the bolts (10).

Fit the end piece for the compressed air (12) in place of the spark plug.

Fit the ring (6) in place of the hydraulic tappet, then fit tool (1).

NOTE:
Always put the piston at TDC for the cylinder on which you are working (without using compressed air). This operation should be carried out before the springs are removed.

If the compressed air is not sufficient to keep the valves closed during removal (remove the air pipe from the end piece (12)), put the piston to TDC and tighten tool (1) until the upper cup becomes detached from the valve spring. When introducing compressed air into the cylinder, there is a risk that the piston will descend to Bottom Dead Centre.

Before disconnecting the compressed air pipe, ensure that the valves are correctly held in place.

For the N7U engine

After removing the camshafts and the hydraulic tappets for the valves.

Inlet side

Fit the flanges (5) as indicated in the diagram below.

Fit the flange engraved **ND at (A)**, the flange engraved **NM at (B)** and the flange engraved **NG at (C)** securing them using bolts (11).

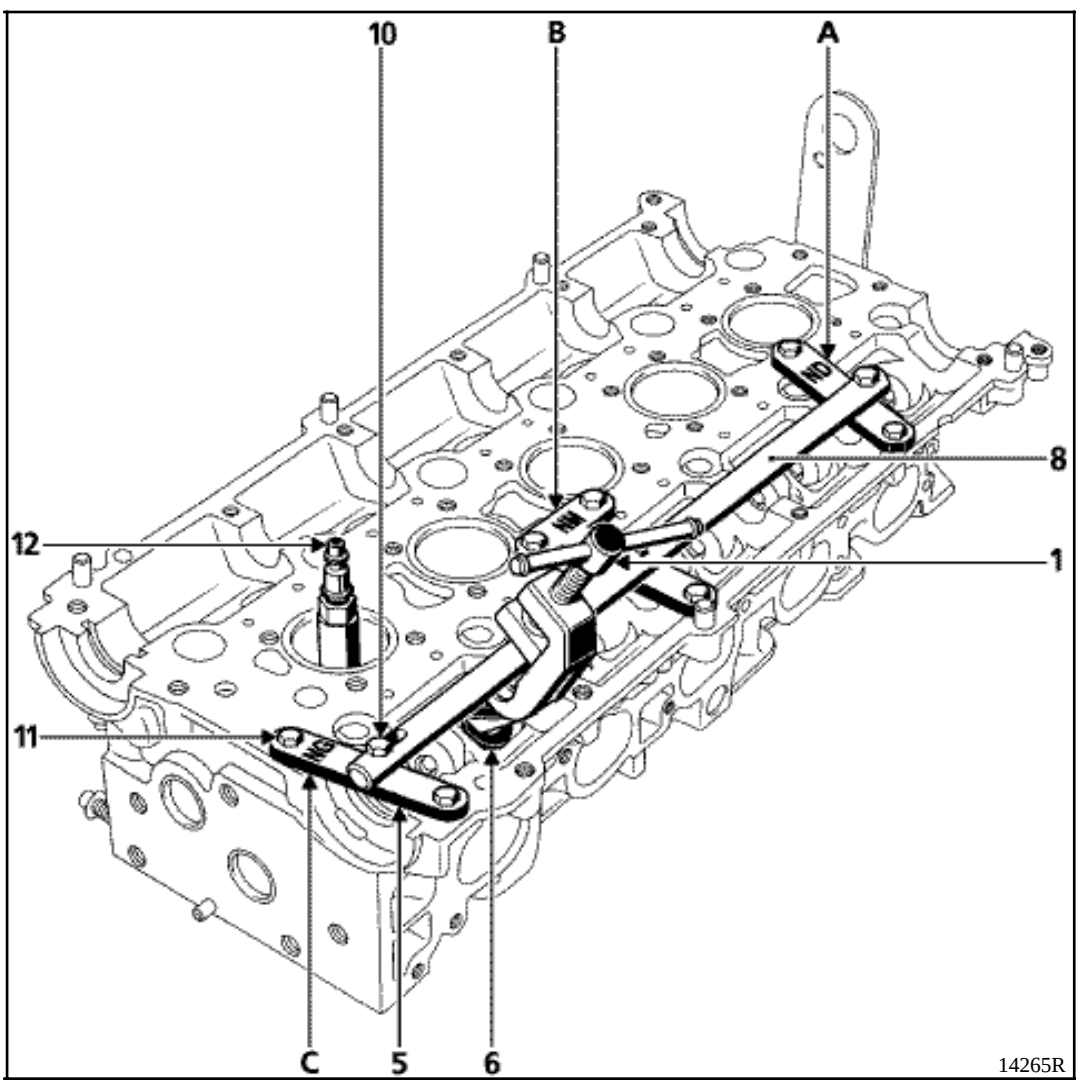

Fix the bar (8) onto the flanges (5) using the bolts (10).

Fit the end piece for the compressed air (12) in place of the spark plug.

Fit the ring (6) in place of the hydraulic tappet, then fit tool (1).

Reposition the assembly as indicated on the diagram below for the valve stem seals of the 5th cylinder.

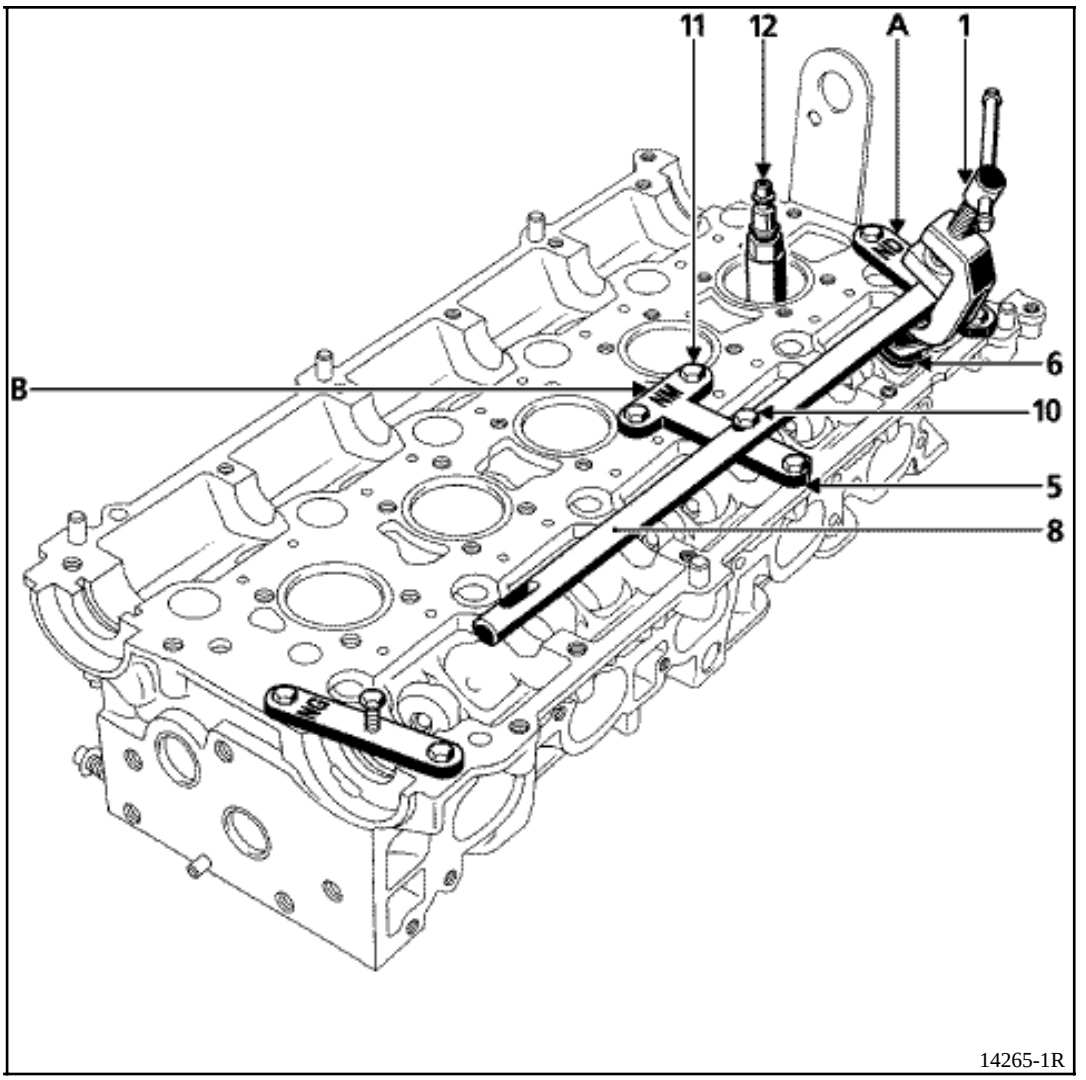

Exhaust end

Fit the flanges (5) as indicated in the diagram below.

Fit the flange engraved **ND at (D)**, the flange engraved **NM at (E)**, **putting the engraved part on the cylinder head side,** and the flange engraved **NG at (F)** securing them using bolts (11).

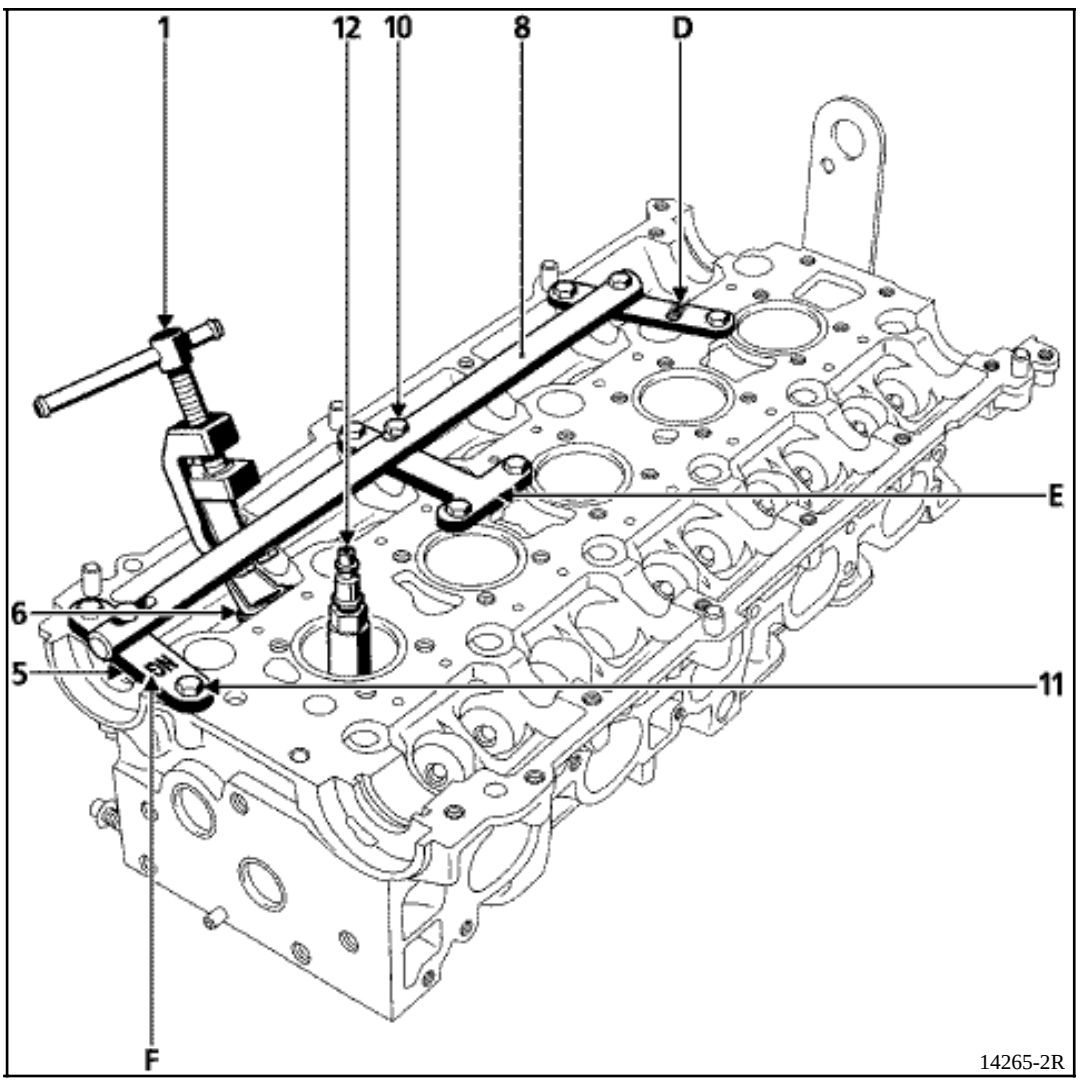

Fix the bar (8) onto the flanges (5) using the bolts (10).

Fit the end piece for the compressed air (12) in place of the spark plug.

Fit the ring (6) in place of the hydraulic tappet, then fit tool (1).

Reposition the assembly as indicated on the diagram below for the valve stem seals of the 5th cylinder.

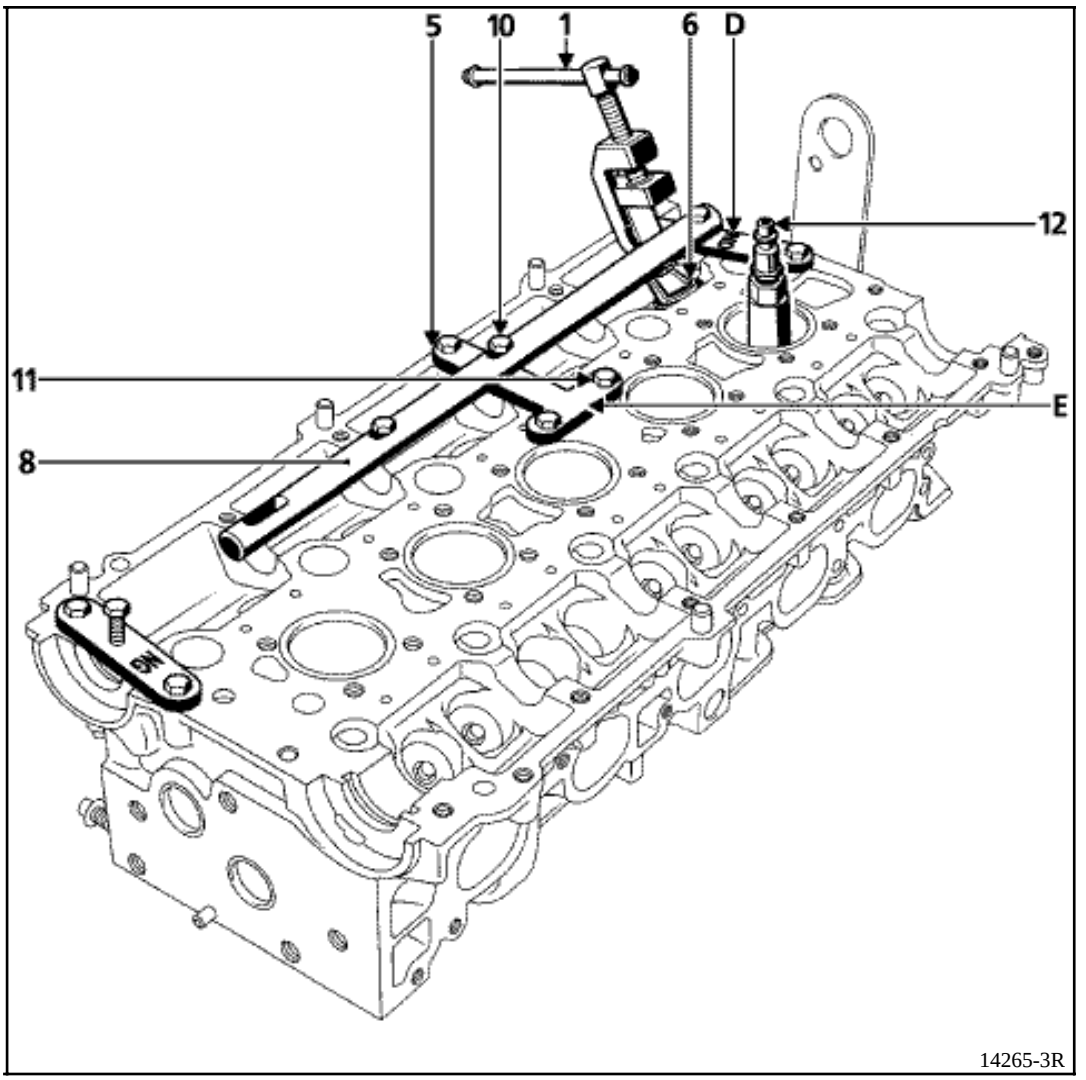

NOTE: Always put the piston at TDC for the cylinder on which you are working (without using compressed air). This operation should be carried out before the springs are removed.

If the compressed air is not sufficient to keep the valves closed during removal (remove the air pipe from the end piece (12)), put the piston to TDC and tighten tool (1) until the upper cup becomes detached from the valve spring. When introducing compressed air into the cylinder, there is a risk that the piston will descend to Bottom Dead Centre.

Before disconnecting the compressed air pipe, ensure that the valves are correctly held in place.

Using tools (2) and (3) for removing and refitting the valve adjusting shims

Using the tool (2)

Tool (2) is used for engines with **a large hub camshaft (large radius : 18 mm)**.

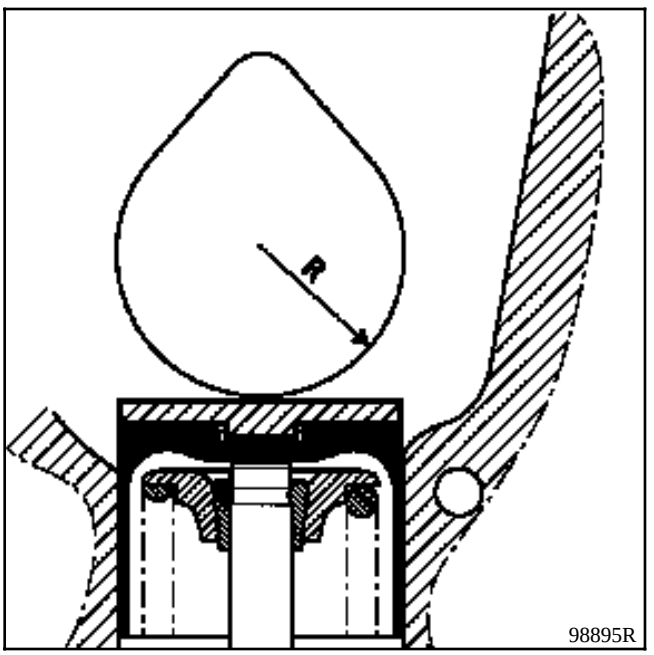

There are two types of notches on the large hub tappets.

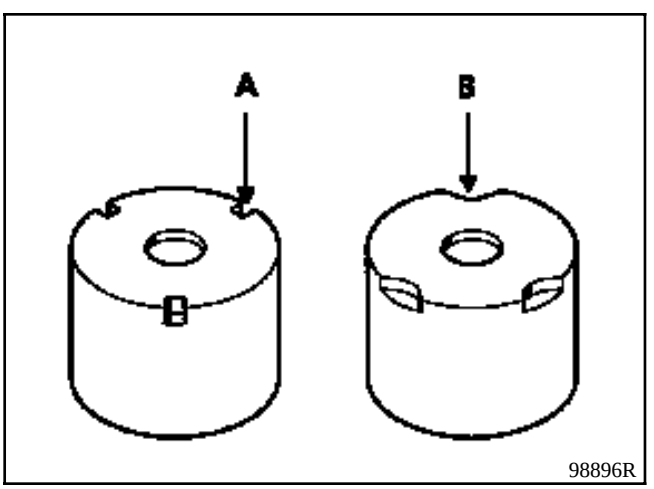

A - Square shaped notches.
B - Half-moon shaped notches.

Once the cylinder head cover is removed, place the tappet notches facing towards the rear of the cylinder head to make it easier to fit the tool (2).

Lower the tappets using the tool (2).

Take out the adjusting shims using a screwdriver and a magnetic finger.

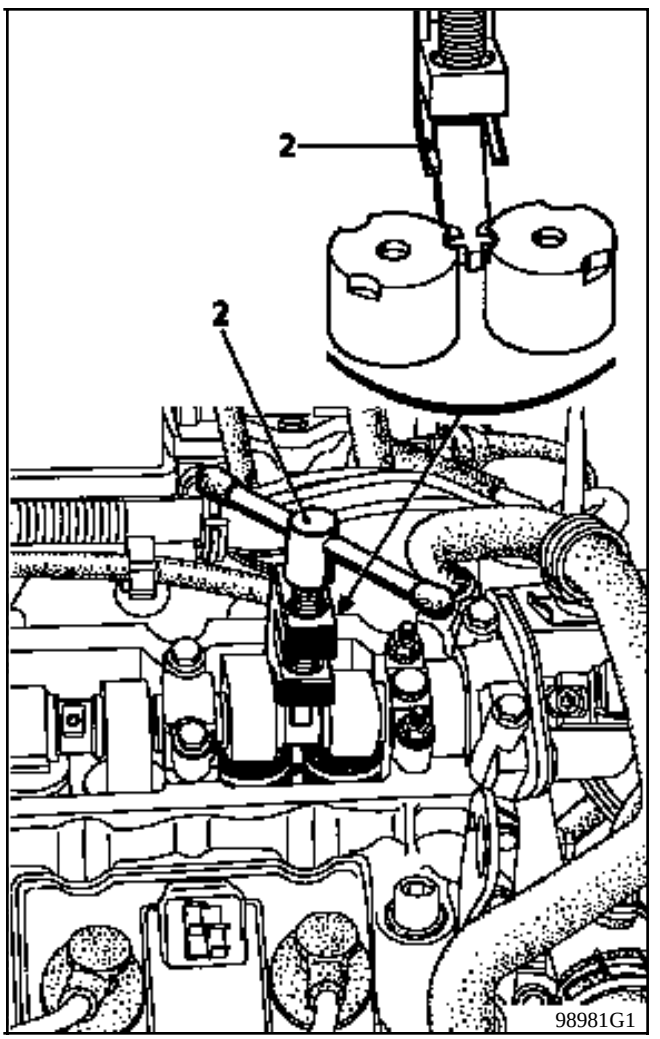

NOTE : when refitting the adjusting shim, remove the oil contained in the bottom of the tappet bore (C).

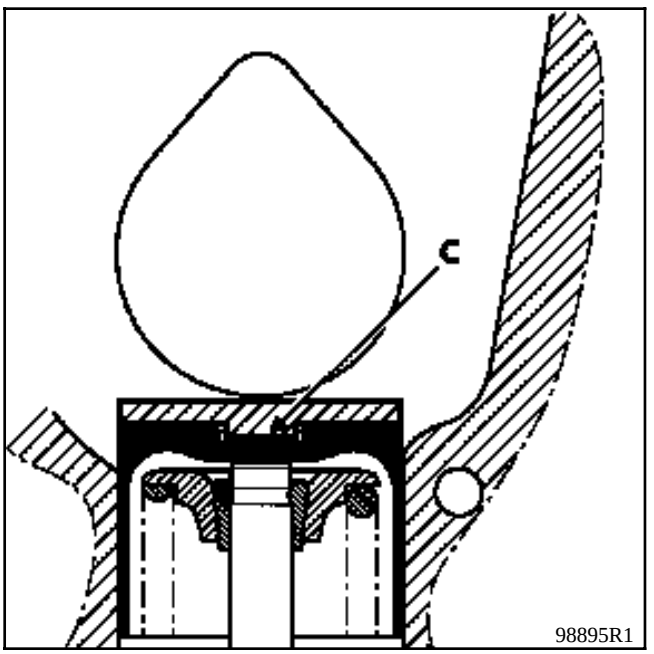

Using the tool (3)

Tool (3) is used for engines with **a small camshaft hub (small radius : 16.5 mm)**.

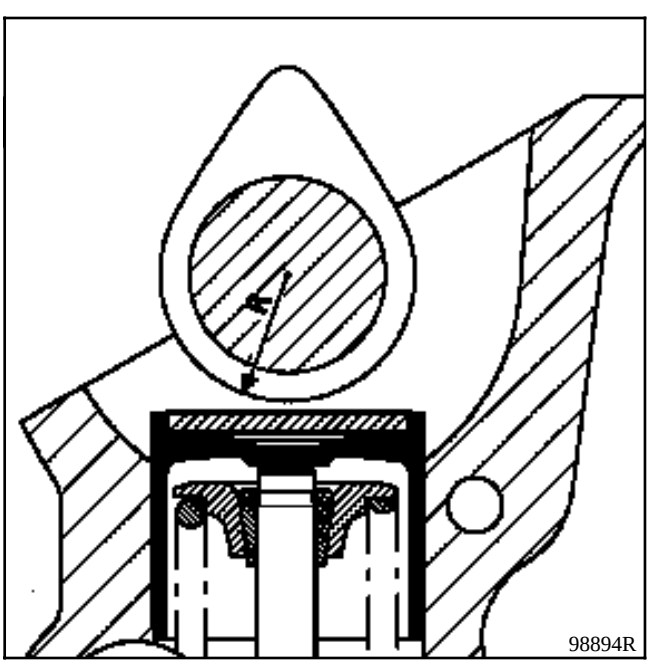

Once the cylinder head cover is removed, place the tappet notches (A) facing towards the front of the vehicle, then fit the tool (3).

Lower the tappets using the tool (3).

Take out the adjusting shims using a screwdriver and a magnetic finger.

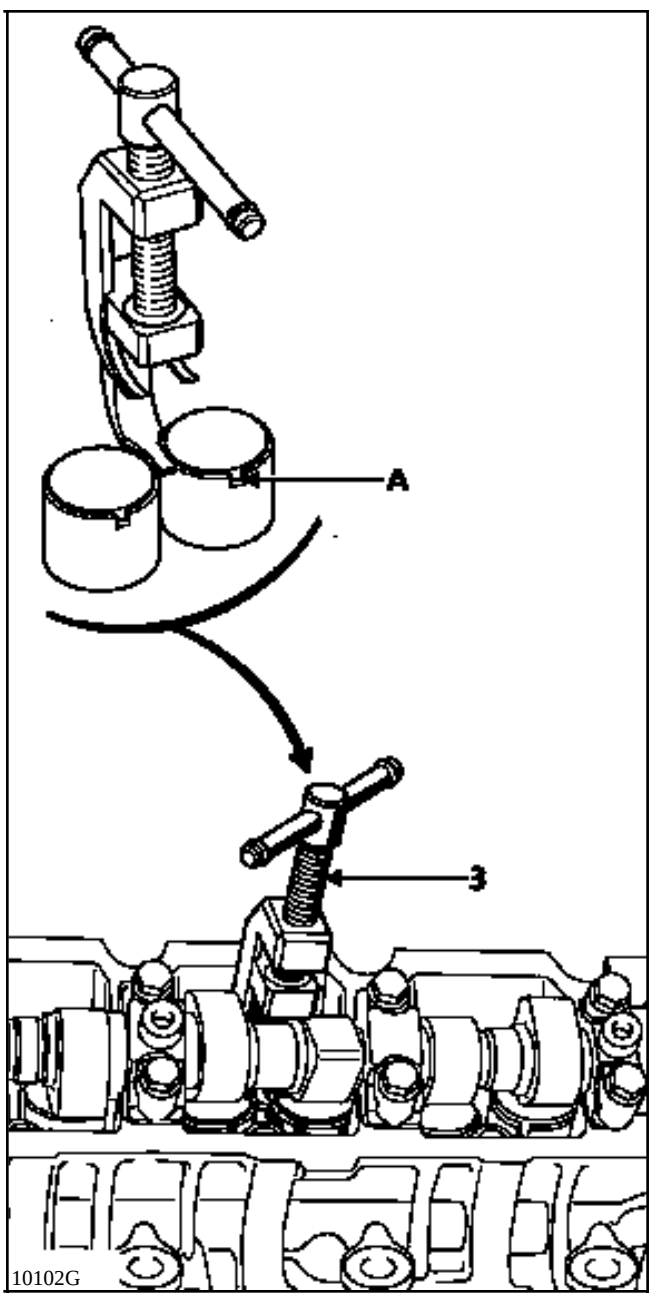

SPECIAL TOOLING REQUIRED	
Mot. 1366-01	**Tool for removing shims (addition to Mot. 1366)**

CHECKING VALVE CLEARANCE

Place the valves for the cylinders concerned at the end of exhaust start of inlet position and check the clearance.

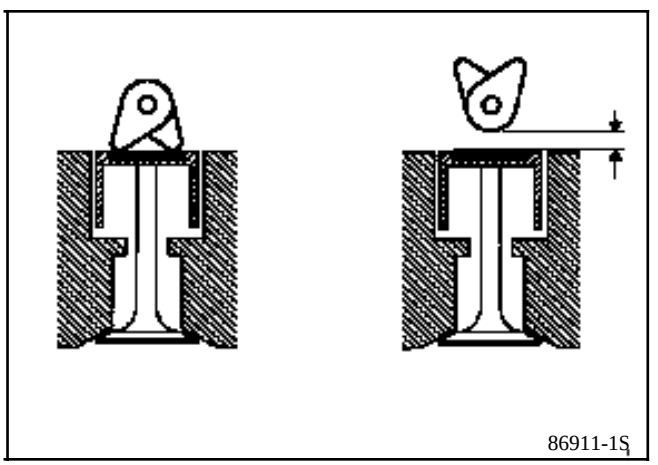

1	**4**
3	**2**
4	**1**
2	**3**

Compare the two values noted to the specified values, replace the shims concerned.

Clearance (in mm) when cold:

- Inlet : **0.20**
- Exhaust : **0.40**

REPLACING THE SHIMS

This operation requires the removal of the inlet and exhaust manifolds (see section **12** "**Inlet / exhaust manifolds**" for the vehicle concerned).

Place the valve concerned in the fully open position (by turning the engine in the direction of operation).

Insert the **Mot. 1366-01** into the aperture concerned.

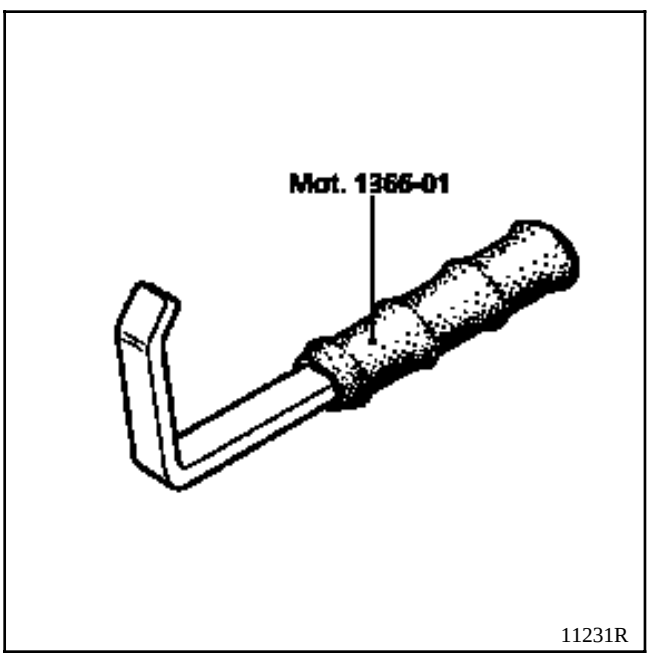

11231R

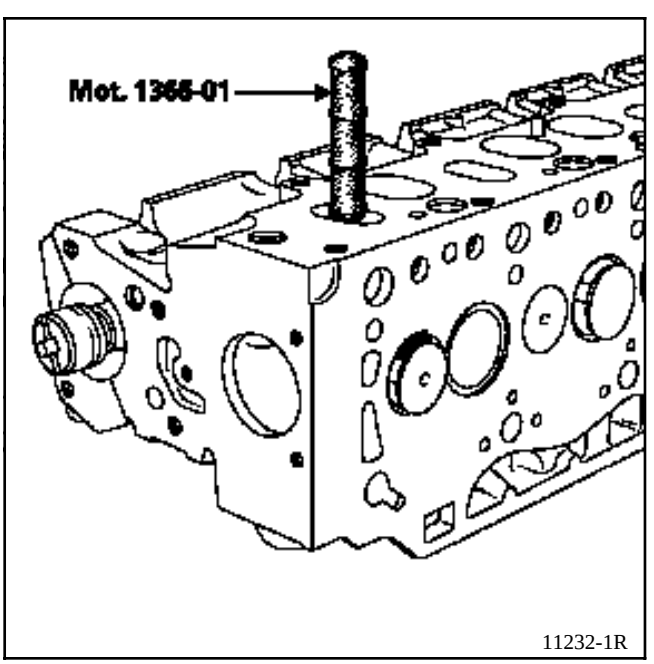

11232-1R

For inlet valves

Turn the engine in the direction of operation, so that the valve touches tool **Mot. 1366-01** (camshaft rotates **90**° in relation to the fully open position).

For exhaust valves

The engine MUST be turned in the direction opposite to that of operation (to avoid locking the engine), until the valve touches tool **Mot. 1366-01** (camshaft rotates **90**° in relation to the fully open position).

Take out the adjusting shims using a screwdriver and a magnetic finger.

NOTE : when refitting the adjusting shim, remove the oil contained in the bottom of the tappet bore (C).

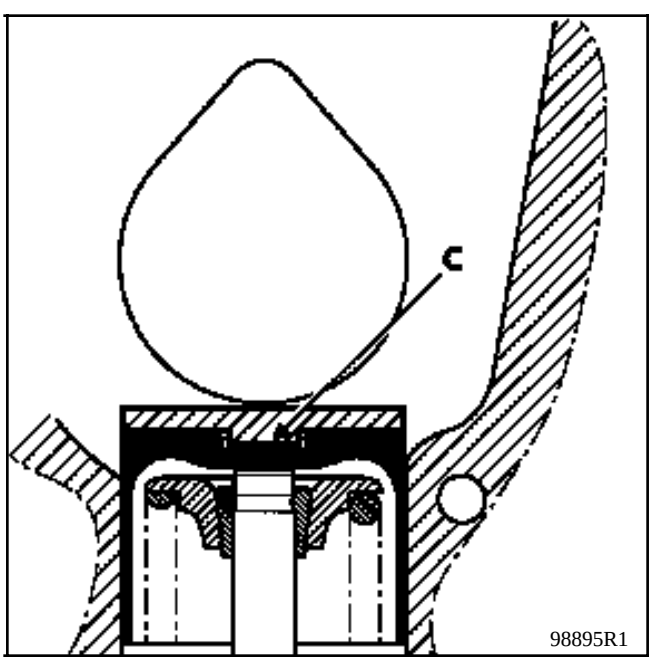

98895R1

REFITTING

Refitting is the reverse of removal.

SPECIAL TOOLING REQUIRED		
Mot.	**252-01**	**Pressure plate for measuring cylinder liner protrusion**
Mot.	**856-02**	**Adaptor for gauge holder**

EQUIPMENT REQUIRED
Gauge mounting

Checking valve clearance

Place the valves for the cylinder concerned in the end of exhaust start of inlet position and check the clearance (X).

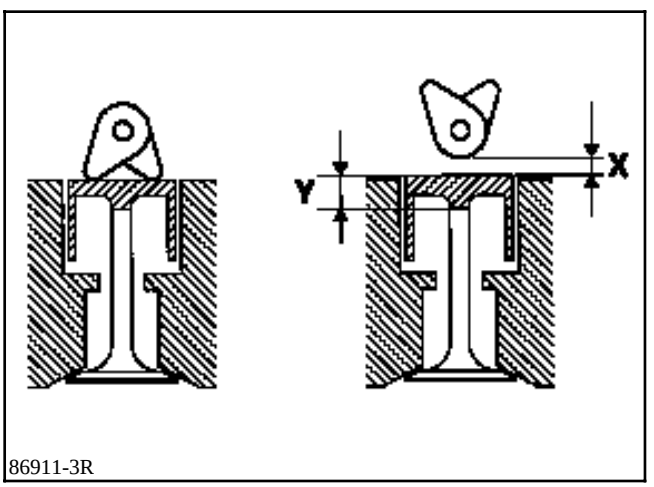

1	**4**
3	**2**
4	**1**
2	**3**

Compare the two values noted to the values specified, then replace the tappets concerned.

Valve clearance (in mm) when cold :

- Inlet : **0.20**
- Exhaust : **0.40**

Replacing the monoblock tappets

The operation for replacing the monoblock tappets requires removal of the camshaft.

Dimension (Y) corresponds to the tappet class, of which there are 25.

Measuring the dimension (Y)

Use **Mot. 252-01 and Mot. 856-02** to set the equipment up as follows and zero the gauge.

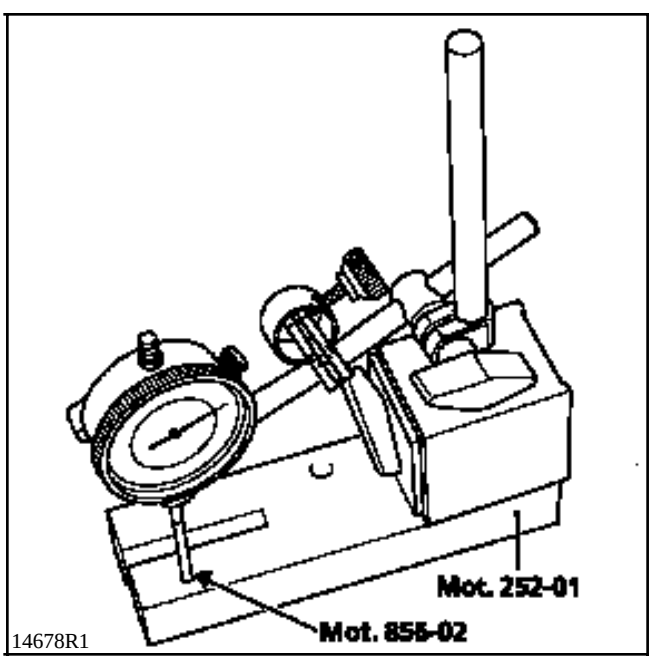

Raise the gauge extension and slide (without changing the position of the assembly) the tappet to be measured.

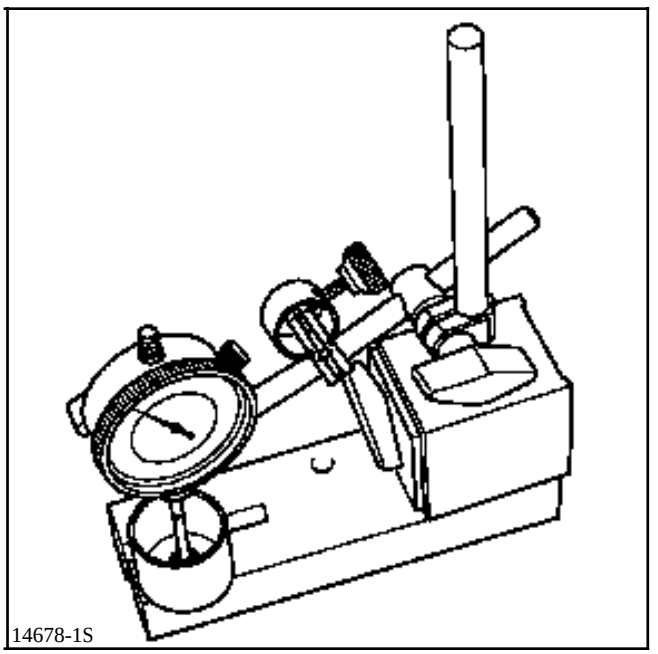

Note dimension (Y) and repeat the operation for the tappets whose valve clearance is outside the tolerance limits.

Then refer to the Spare Parts catalogue for the vehicle concerned for the choice of replacement tappets. The Parts Department supplies 25 types of monoblock tappets.